Guide Sheet for Utah Faults

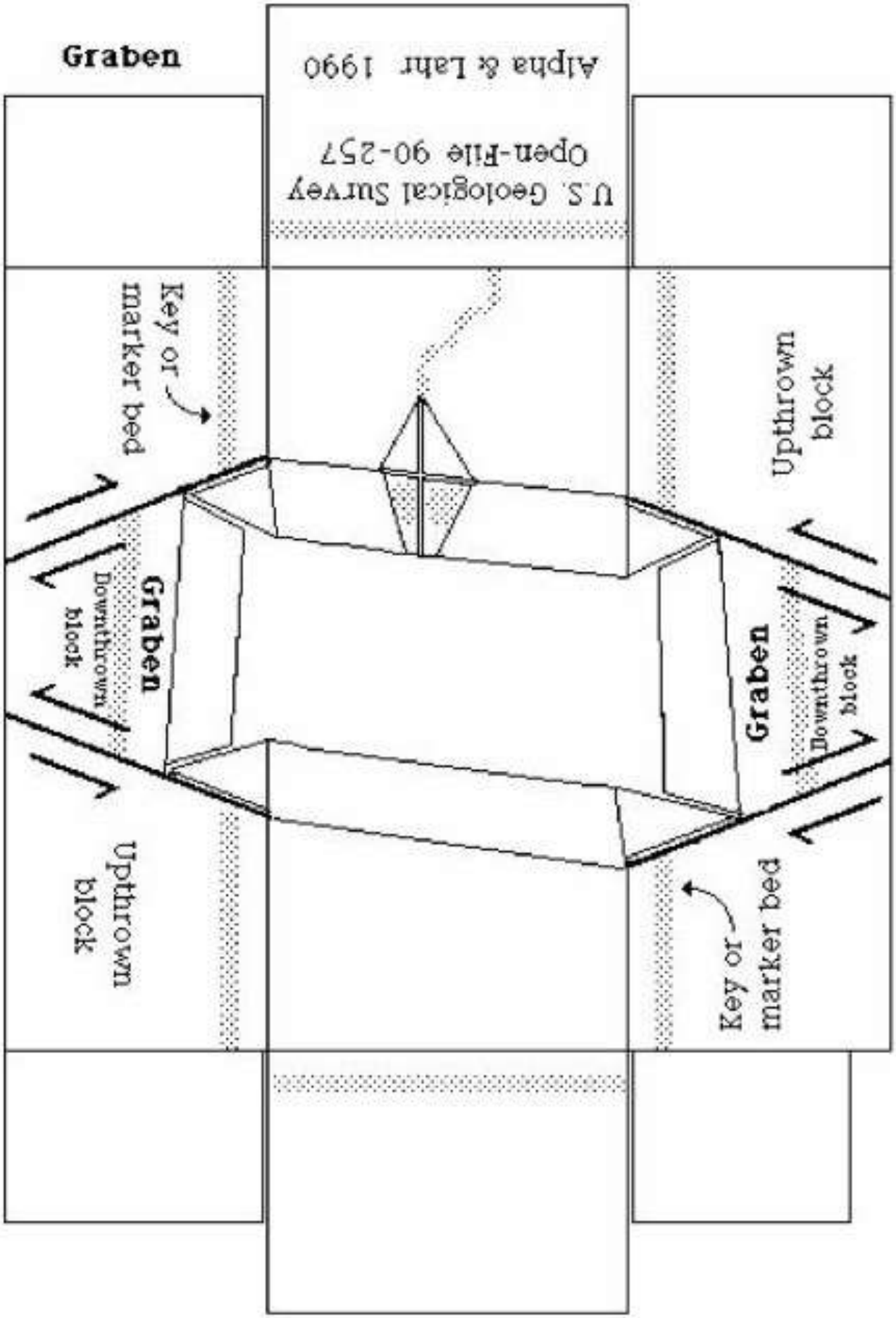

Guide Sheet for Utah Faults

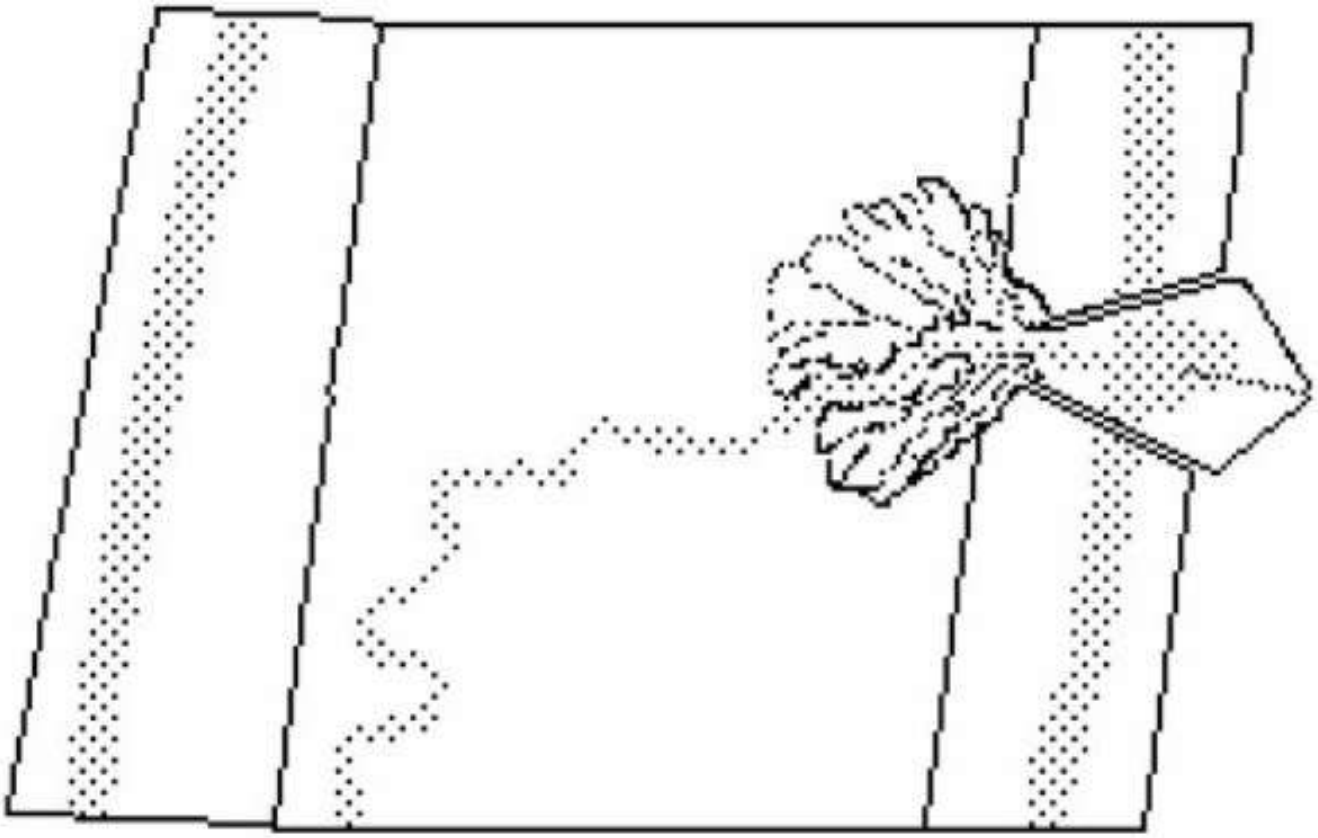

Guide Sheet for Utah Faults

Step 1

Cut out the pattern of the paper model by cutting along its borders.

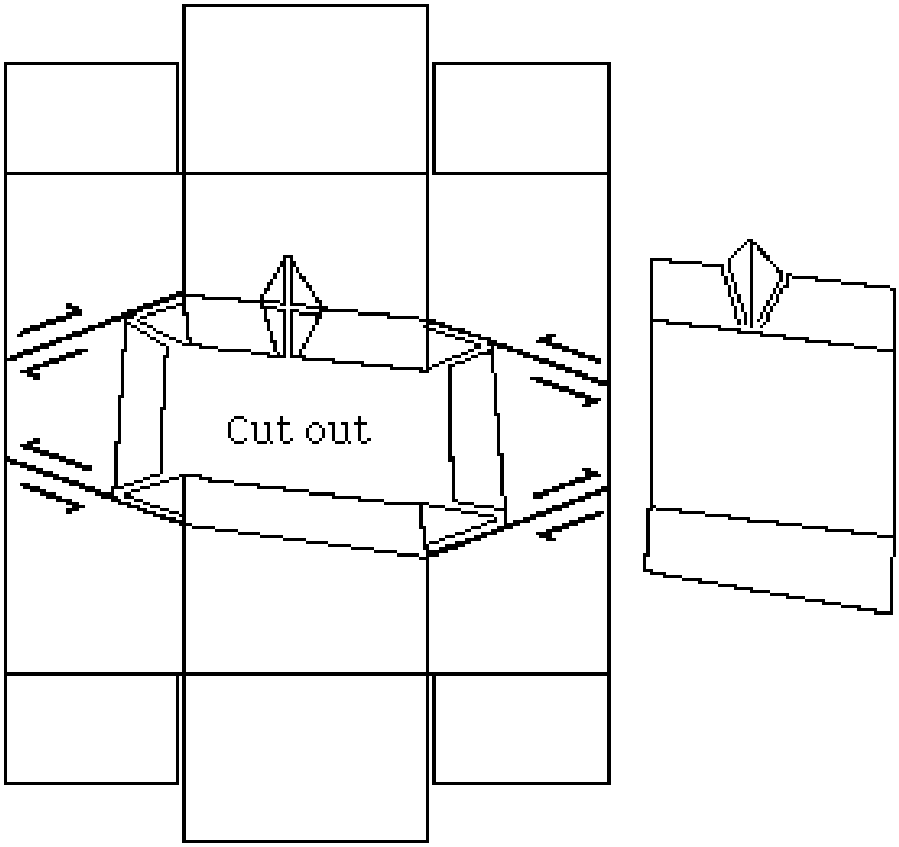

Step 2

Make creases and fold along the solid straight lines within the pattern, folding so the printed side faces outward.

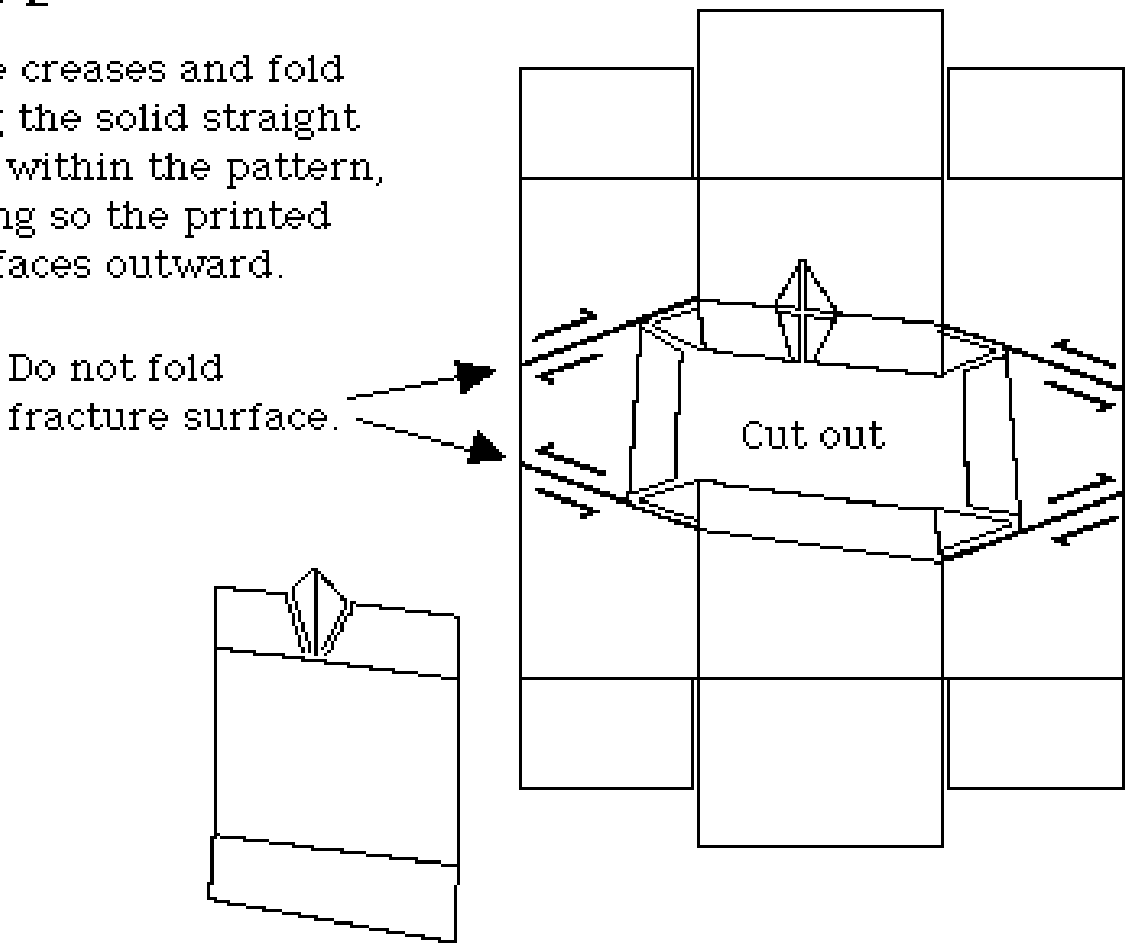

Guide Sheet for Utah Faults

Step 3

Glue the marked tabs.

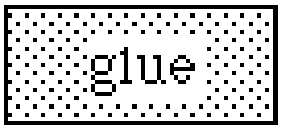

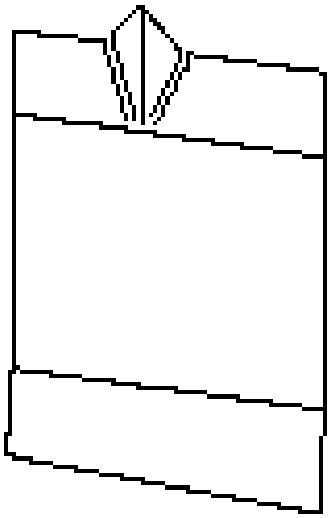

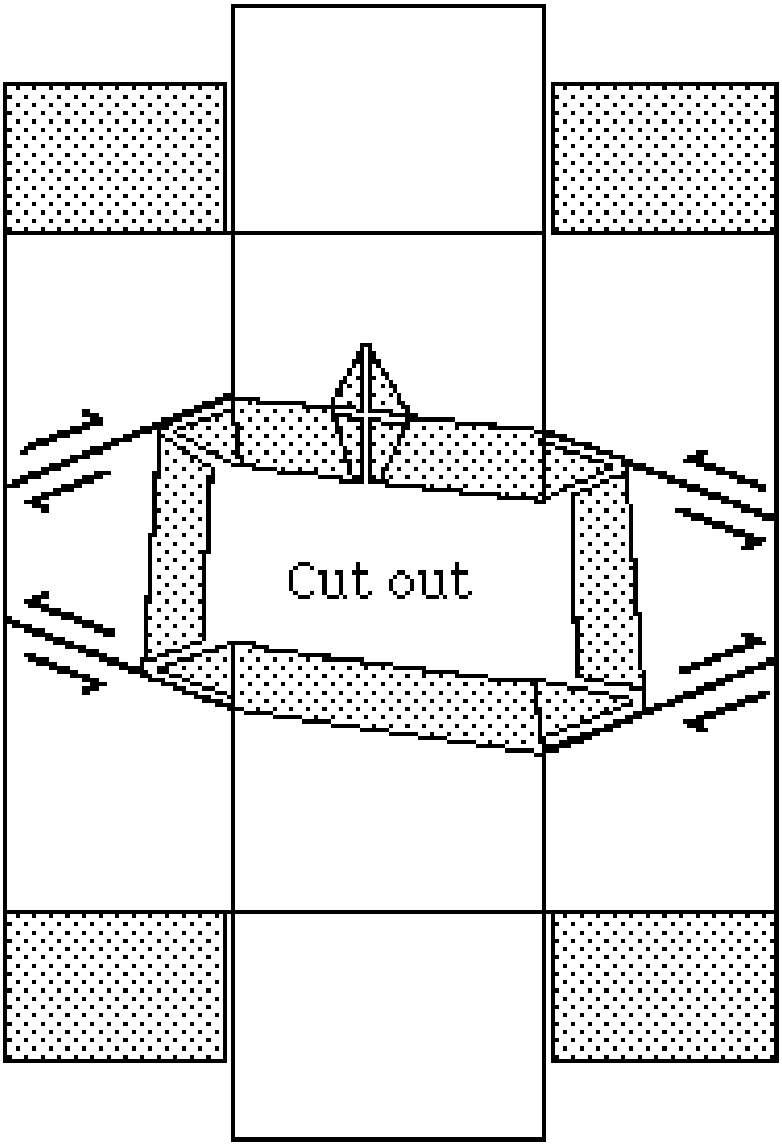

Guide Sheet for Utah Faults

Step 4 Assembling the model.

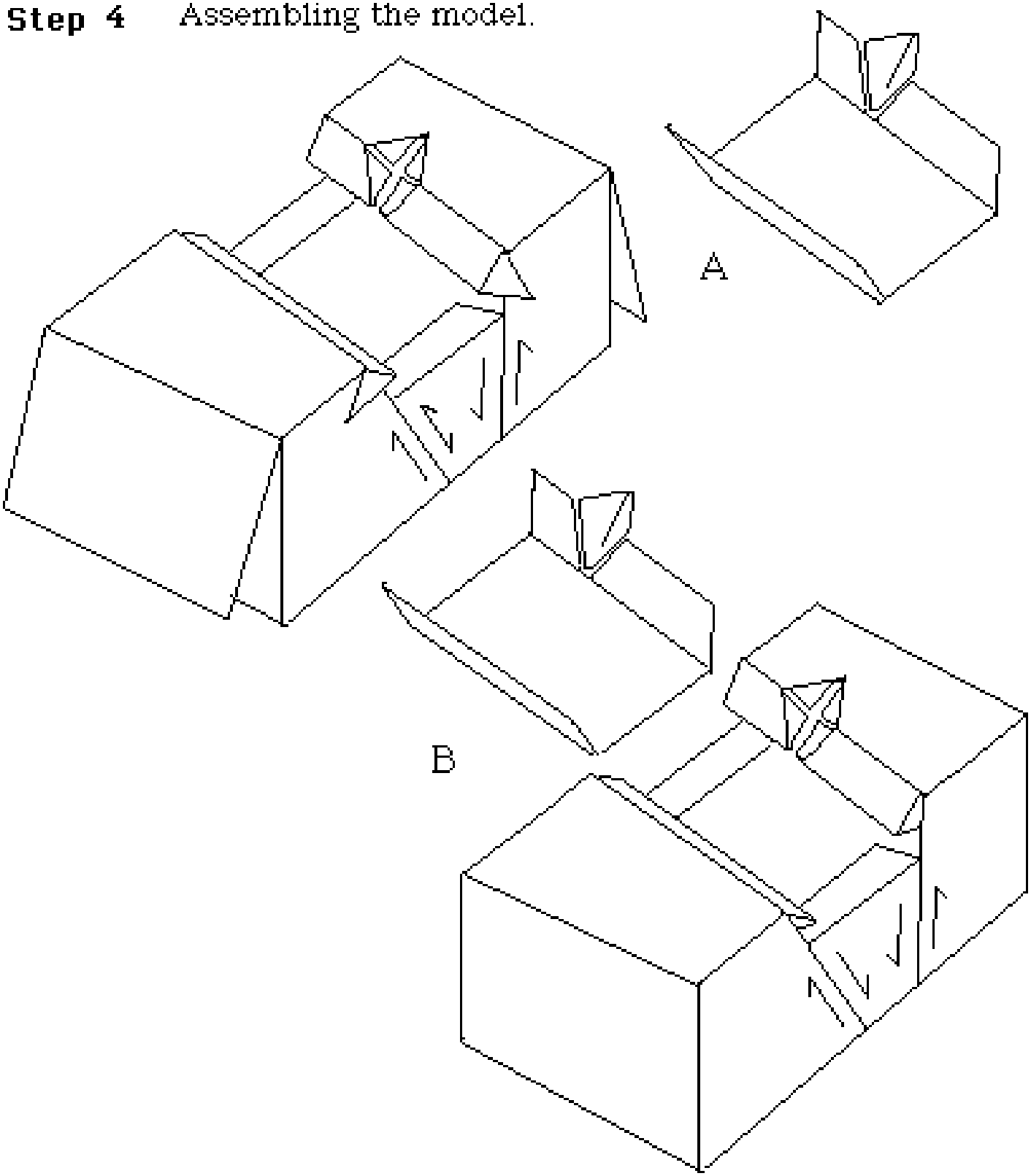

Step 5

The assembled model should look like this.

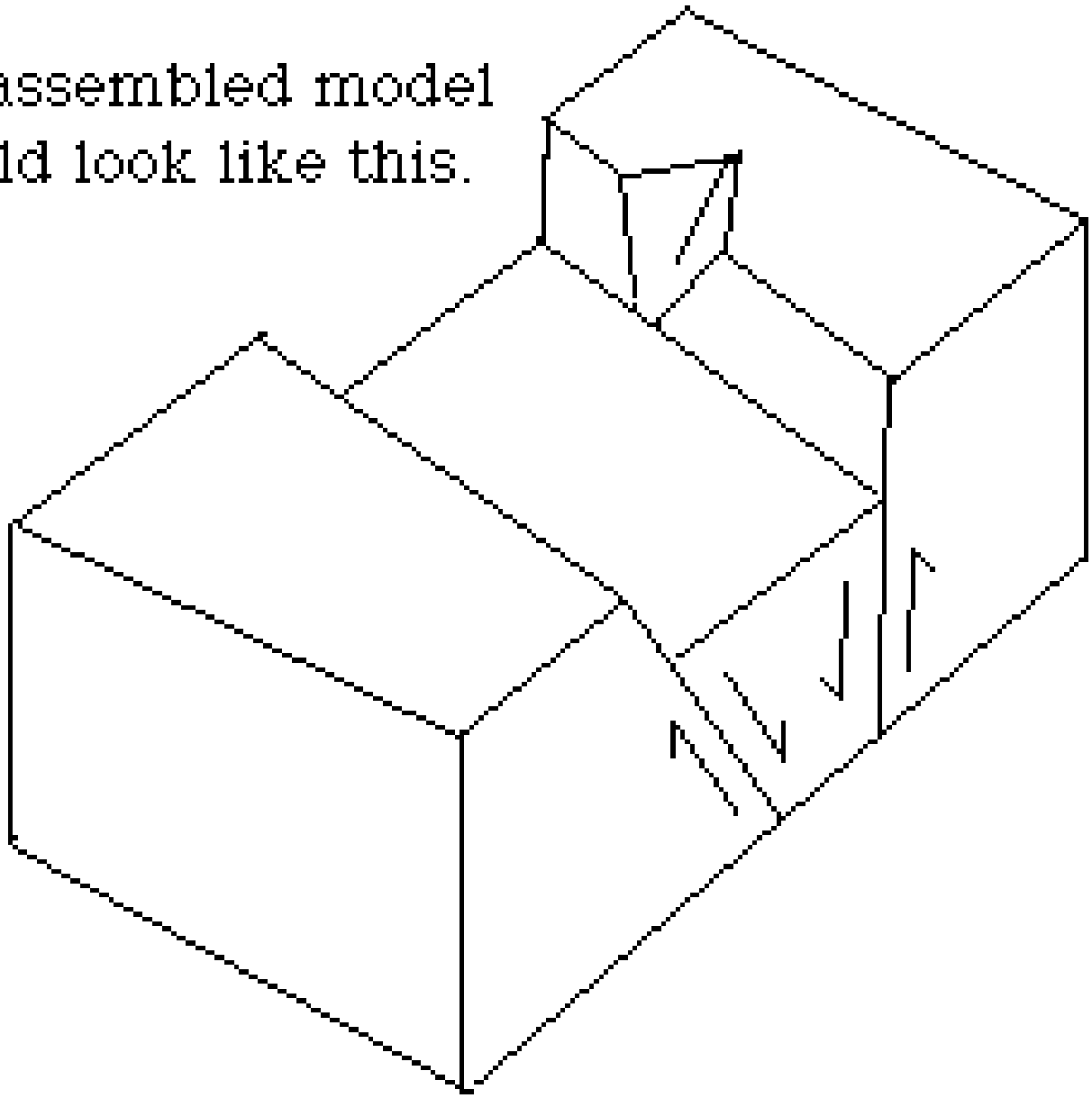

Guide Sheet for Utah Faults

er

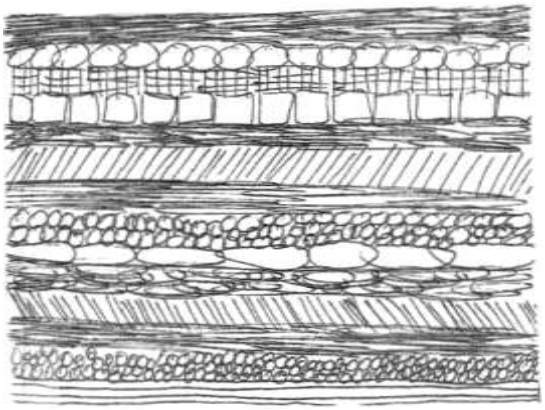

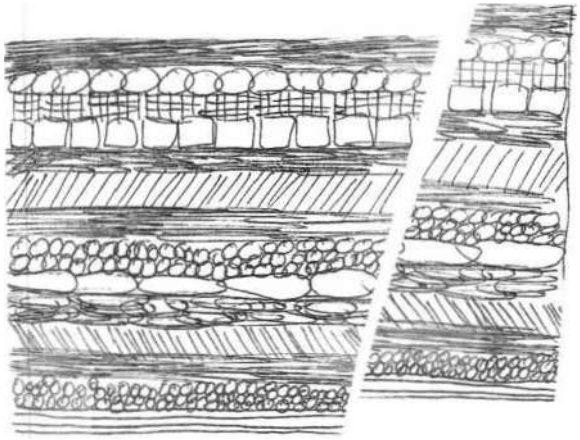

This will be taped or glued to students' journal or note taking paper.

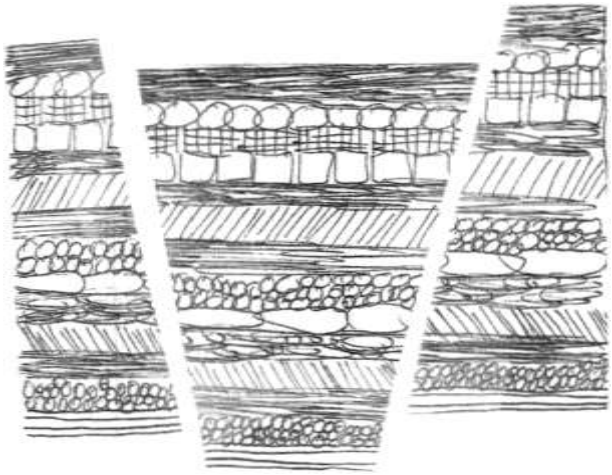

Normal-Slip Fault

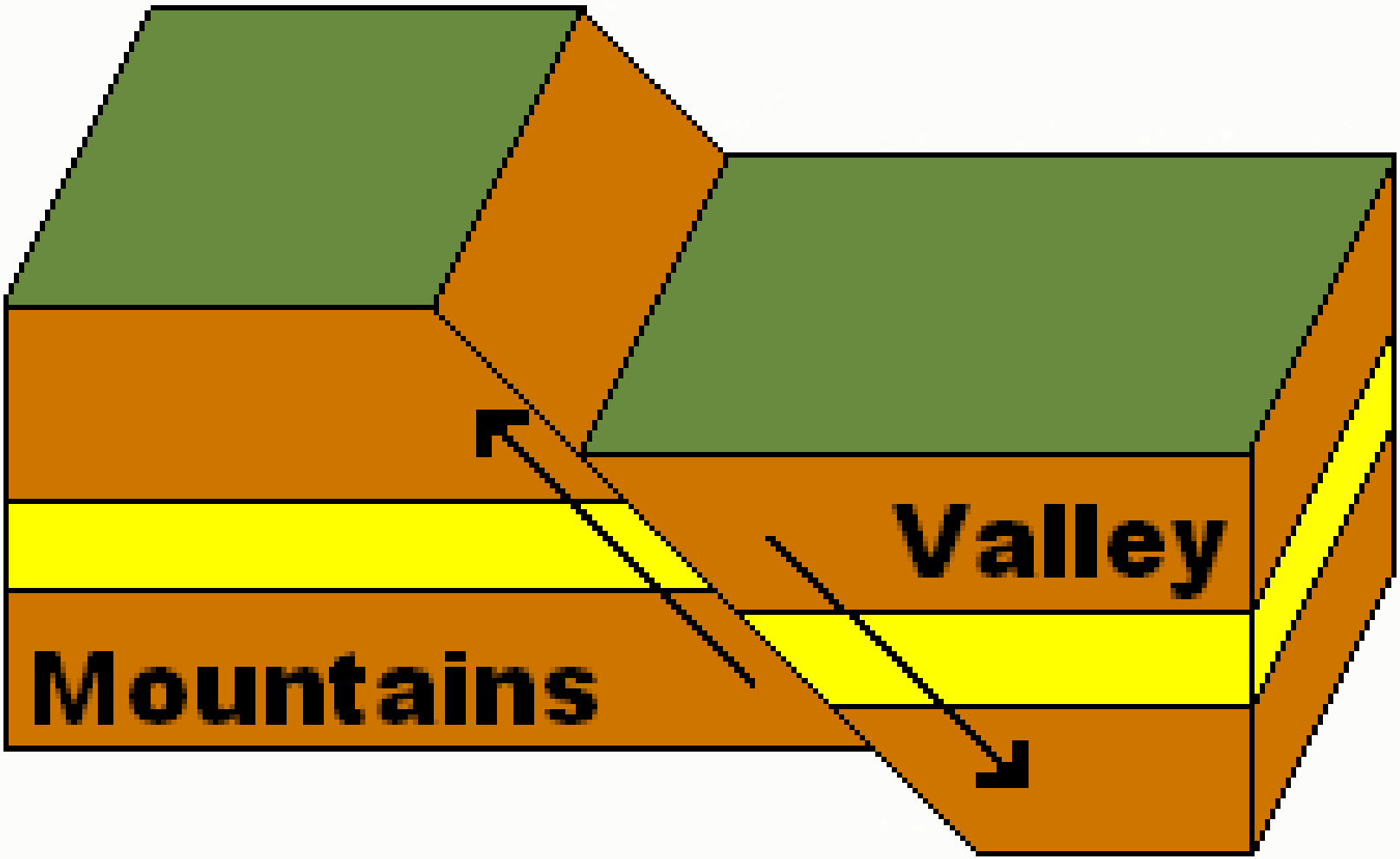

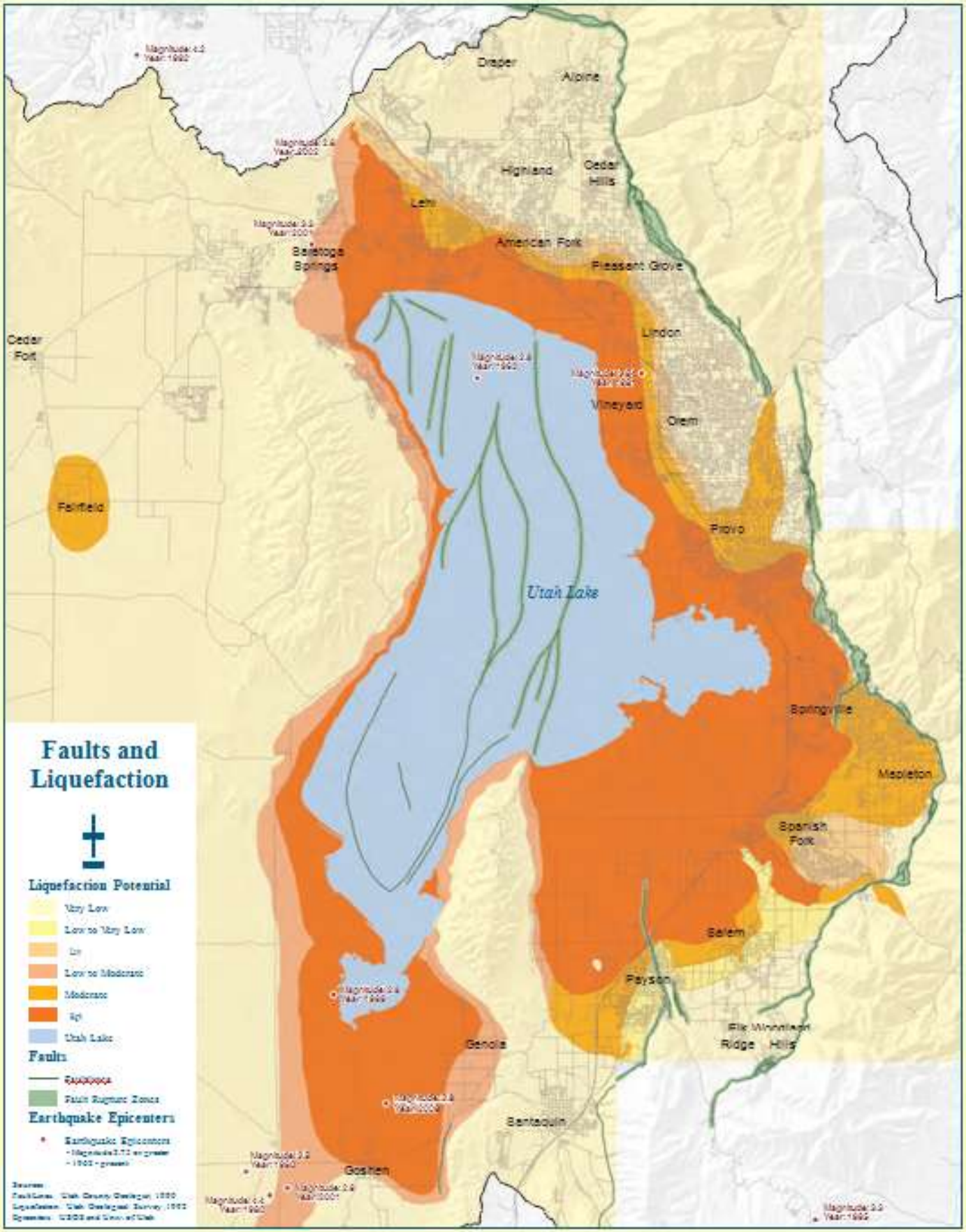
Draper
Alpine
Highland
Cedar Hills
Lehi
American Fork
Saratoga Springs
Pleasant Grove
Lindon
Cedar Fort
Vineyard
Orem
Fairfield
Provo
Utah Lake
Springville
Mapleton
Spanish Fork
Salem
Payson
Elk Ridge
Winnemucca Hills
Genola
Santaquin
Goshen
Faults and Liquefaction
Liquefaction Potential
Very Low
Low to Very Low
Low
Low to Moderate
Moderate
High
Utah Lake
Faults
Fault Rupture Zones
Earthquake Epicenters